San Jose State University
SJSU ScholarWorks

Master's Projects | Master's Theses and Graduate Research

4-1-2011

Decompiler For Pseudo Code Generation

Ankit Patel
San Jose State University

Follow this and additional works at: http://scholarworks.sjsu.edu/etd_projects

Recommended Citation
Patel, Ankit, "Decompiler For Pseudo Code Generation" (2011). *Master's Projects.* Paper 182.

This Master's Project is brought to you for free and open access by the Master's Theses and Graduate Research at SJSU ScholarWorks. It has been accepted for inclusion in Master's Projects by an authorized administrator of SJSU ScholarWorks. For more information, please contact scholarworks@sjsu.edu.

Decompiler For Pseudo Code Generation

A Project Report

Presented to

The Faculty of the Department of Computer Science

San Jose State University

In Partial Fulfillment

Of the Requirements for the Degree

Master of Computer Science

By

Ankit Patel

May 2011

© 2011

Ankit Patel

ALL RIGHTS RESERVED

SAN JOSÉ STATE UNIVERSITY

The Undersigned Project Committee Approves the Project Titled

Decompiler For Pseudo Code Generation

By

Ankit Patel

APPROVED FOR THE DEPARTMENT OF COMPUTER SCIENCE

_____

Dr. Mark Stamp, Department of Computer Science Date

_____

Dr. Robert Chun, Department of Computer Science Date

_____

Ravi Savaliya, Senior Software Developer, Ebay Date

_____

Associate Dean Office of Graduate Studies and Research Date

Abstract

Decompiler For Pseudo Code Generation

By Ankit Patel

Decompiling is an area of interest for researchers in the field of software reverse engineering. When the source code from a high-level programming language is compiled, it loses a great deal of information, including code structure, syntax, and punctuation.

The purpose of this research is to develop an algorithm that can efficiently decompile assembly language into pseudo C code. There are tools available that claim to extract high-level code from an executable file, but the results of these tools tend to be inaccurate and unreadable.

Our proposed algorithm can decompile assembly code to recover many basic high-level programming structures, including if/else, loops, switches, and math instructions. The approach adopted here is different from that of existing tools. Our algorithm performs three passes through the assembly code, and includes a virtual execution of each assembly instruction. We also construct a dependency graph and incidence list to aid in the decompilation.

ACKNOWLEDGEMENTS

I would like to thank Dr. Mark Stamp, for guiding me through this research project and working with me to achieve this. I also thank him for his suggestions and contributions for handling some of the difficulties faced during the course of this project. Without him, this would not have been possible.

I would also like to thank Prof. Debra Caires for teaching me an efficient and effective thesis documentation process.

Table of Contents

1. Introduction 1

1.1 Objective 2

2. Background 3

2.1 Fundamentals of forward and reverse engineering 3

2.2 Windows portable executable file format 5

2.3 Assembly language 6

3. Decompilation 9

3.1 Benefits of Decompiling 9

3.2 Decompiler problems 11

3.2.1 Information loss 11

3.2.2 Separation of .code and .data sections 13

3.2.3 Differentiating original pointers from address offsets 14

3.2.4 Detecting constants from the pointers 14

3.3 Limitations 15

3.4 Types of Decompilers 15

3.5 Present decompiler tools 17

5. Decompiler algorithm 20

5.1 Initial Preparation 20

5.2 Algorithm 22

5.1 First Pass – Raw view 24

5.1.1 Raw view example 24

5.2 Second Pass – Parsed view 25

5.2.1 Parsed view example 27

5.3 Third Pass – Recognized view 27

5.3.1 Stack initialization and analysis 28

5.3.2 Register initialization and analysis 29

5.3.3 Graph Generation 30

5.3.4 Output generation 38

5.3.5 Output 39

6. Test cases and Results 40

6.1 Comparison with manual decompilation 42

8. Future Work 45

Appendix A – Test cases and results 47

References 59

List of Figures

Figure 1: Forward and reverse engineering 4

Figure 2: Assembly instruction format 8

Figure 3: Assembly code snippet of an algorithm checking the number of free trails used in the software 10

Figure 4: Decompiling algorithm flow chart 23

Figure 5: Raw view input 24

Figure 6: Parsed view output 27

Figure 7: Stack Initialization 28

Figure 8: Registers initialization 29

Figure 9: Nested if dependency graph 32

Figure 10: If - then dependency graph 33

Figure 11: Dependency graph for if/else 34

Figure 12: Dependency graph for loop 35

Figure 13: Dependency graph for switch case 37

Figure 14: Recognized view output 39

Figure 15: Decompiler generated output 42

Figure 16: Decompiler generated output 44

List of Tables

Table 1 : High level code and assembly code comparison 1

Table 2: Examples of high level code and assembly code 2

Table 3: Comparison of Dcc and REC 19

Table 4: Assembly instruction string format 24

Table 5: Supported assembly instructions 26

List of Code

Code 1: C code for understanding read/write access of .data section 5

Code 2: Unoptimized high level code 11

Code 3: Code before compilation 12

Code 4: C code example containing data within code 13

Code 5: Code example for pointer offset outside the bounds of array 14

Code 6: Code example for pointer offset inside the bounds of array 14

Code 7: Function calling convention 21

Code 8: Recognized instruction C structure 25

Code 9: Supported instructions' function handlers 31

Code 10: Nested if 31

Code 11: Test case C code 40

Code 12: if/else original C code 43

Code 13: Manually generated output 43

List of Assembly code

Assembly code 1: Example of assembly code depicting information loss 12

Assembly code 2: Loss of data in .Code section 13

Assembly code 3: _stdcall calling convention 21

Assembly code 4: _cdecl calling convention 22

Assembly code 5: _fastcall calling convention 22

Assembly code 6: Parsed view input 27

Assembly code 7: Test case assembly code 41

Assembly code 8: Assembly code if/else 43

1. Introduction

> "Reverse engineering is the process of identifying a system's components and their interrelationships, and creating representations of the system in another form or at a higher level of abstraction." [9]

Source code is compiled to assembly code by the compiler. Assembly code consists of a series of instructions that is executed by the micro-processing unit of the computer [7], whereas source code is usually written in high-level programming languages like C, C++, Java, or C# [23]. These languages are designed to be used and understood by humans to program a computer. Software requires constant maintenance and upgrades to deliver the best performance, user experience, and functionality, and high-level languages play an important role in understanding and modifying software. A decompiler comes into play when the source code is not available [14] [4].

Complete decompilation of assembly code is not only difficult, but very limited [1] [3]. High-level programming language is very detailed and descriptive, following specific structures and syntax that make it very easy to understand – the programmer does not need to worry about how the hardware will execute the code [32]. On the other hand, assembly language is significantly hardware-dependent; assembly code is series of instructions to be performed by the processor, and hence it does not need structure and syntax [8]. Table 1 shows some of the differences between high-level language and assembly code [1].

Table 1 : High-level code and assembly code comparison

High-level code	Assembly code
Highly structured	Less structured (series of instructions)
Complex expressions	Basic expressions only
Machine independent	Highly machine-dependent
Low detail	High detail
High level	Low level

Table 2 shows examples of high-level code and assembly code, illustrating Table 1:

Table 2: Examples of high-level code and assembly code

C code	Assembly code

`void test ( int a, int b )`
`{`
`  if ( a < b )`
`  printf ( "a < b\n" );`
`}`
	`011411A0 push ebp`
	`011411A1 mov ebp,esp`
	`011411A3 sub esp,40h`
	`011411A6 push ebx`
	`011411A7 push esi`
	`011411A8 push edi`
	`011411A9 mov eax,dword ptr [ebp+8]`
	`011411AC cmp eax,dword ptr [ebp+0Ch]`
	`011411AF jge 011411BF`
	`011411B1 push 1145720h`
	`011411B6 call dword ptr ds:[1148248h]`
	`011411BC add esp,4`
	`011411BF pop edi`
	`011411C0 pop esi`
	`011411C1 pop ebx`
	`011411C2 mov esp,ebp`
	`011411C4 pop ebp`
	`011411C5 ret`

1.1 Objective

This research paper deals with the decompilation of assembly code to pseudo C code. Decompiling plays an important role in the field of software reverse engineering because often a software developer needs to understand the assembly language produced from the source code. For example, there are critical security features of software that are vulnerable at assembly level, and hackers can easily exploit them [1]. Studying the code at the assembly level can help the developer to implement security features more efficiently, and can also help in software reusability [9]. But, as mentioned earlier, assembly language is not casually readable – it is extremely time-consuming to understand even a small piece of code.

The algorithm proposed in this paper generates a pseudo C code from an input assembly code. The initial preparations for this algorithm included generation of sample assembly code from small C codes using the Microsoft Visual C++ compiler. These test cases were designed to cover most of the high-level programming language syntaxes and structures, such as if/else, switch case, and loops. The assembly code generated from these sample source codes was analyzed for the critical and commonly-generated assembly instructions. These assembly codes were then stored in a .dis extension file, which is actually a text file. The algorithm proposed in this paper consists of three modules, which are discussed in later sections. The assembly code passes through each of these modules to produce a pseudo C code in the output.

2. Background

To understand the purpose of this paper, it is crucial to understand the fundamentals of forward and reverse engineering, Windows portable executable (PE) file format, and assembly language. The discussion of forward and reverse engineering explains the different phases of software during the compilation and decompilation process. The Windows portable executable file format section explains the structure and sections of the PE file format. And finally, the assembly language section explains the x86 assembler, assembly instruction format, and different categories of assembly instructions.

2.1 Fundamentals of forward and reverse engineering

In forward engineering, source code passes through four phases: compiling, assembling, linking, and execution [32]. Reverse engineering deals with these four phases in reverse order – execution, linking, disassembling, and then decompiling. A considerable amount of information is lost in the transition through these phases, and is unrecoverable in the reverse transition [1].

Reverse engineering consists of many practices, such as reverse assembling from native machine code (disassembling), reverse compiling from assembly code (decompiling), reverse programming from the source code itself (debugging), reverse programming of legacy code, and software reusability [3]. This paper deals with the implementation of reverse compiling from assembly code, a process that faces the most difficulties compared to other techniques. Most compilers generate the assembly code from the source code, which is then parsed by the assembler to generate the object code [32]. These two phases are replaced by the interpreter in scripting languages like Perl, PHP, and JavaScript, as they generate the object code directly from the source code [23]. Virtual compilers (for example, Java compiler) produce byte code, which is equivalent to the object code.

Figure 1 shows the relationships between the various tools used with forward and reverse engineering [1]. The extreme right indicates the tools that take the software from one phase to another. The nodes indicate the language or level of the code at that particular phase. The arrows from top to bottom relate to the software life-cycle in forward engineering, and from bottom to top in reverse engineering. This paper deals with the phase indicated by the arrow in purple.

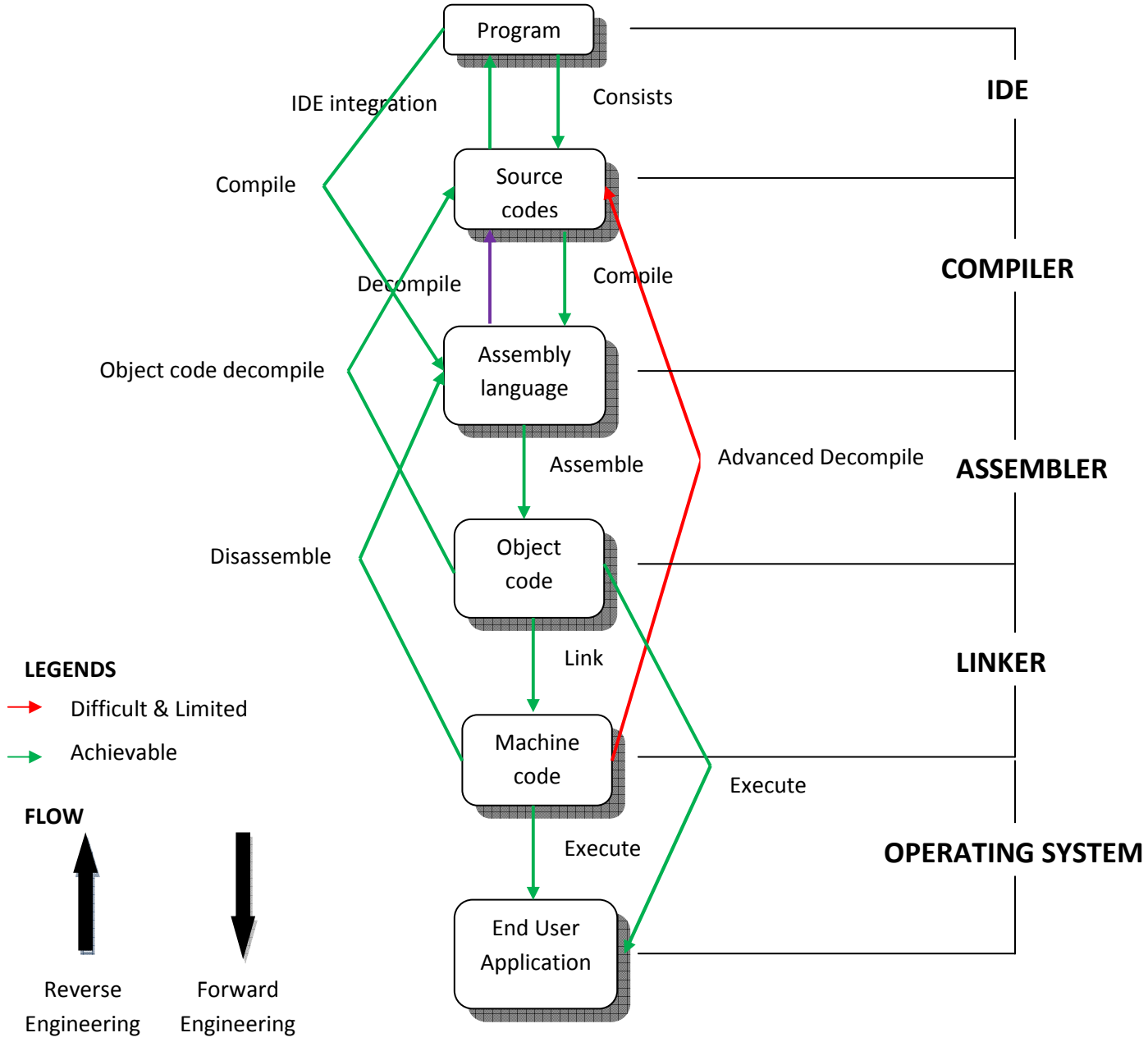

Figure 1: Forward and reverse engineering

2.2 Windows portable executable file format

Portable executable (PE) is a Microsoft-defined file format for the executables in the Windows operating systems. It contains the required information for a loader to manage executable code in the windows environment [12]. The linker gets its information regarding sections and headers from the PE file – the information contained in the PE file decides how the linker loads the file into memory during execution. PE consists of two types of section, the .data section and the .code section (also known as .text section) [12]. Each section possesses its own memory attributes that define whether data is shared between different processes, whether the section contains code, and read–write access. It also consists of more information stored in headers, such as the PE header, DOS header, and section table, which are required for the execution of the program [12]. However, that information is not relevant to our research, and so is not discussed here.

.data section

The .data section is one of the very important sections of the PE file format, containing information about the static and global variables that were initialized in the source code. It is a fixed-size section – like the .code section in the PE file – because the information stored in the .data section is defined by the programmer before the code is compiled. All of the constants and static variables used in the source code are stored in the .data section [12]. The .data section also contains resources and relocations, API imports, and exports tables. The .data section is not read because the values stored in the variables are likely to change during the execution. The example below explains this phenomenon:

```
int i[] = {1,2,3,4,5};
int j = 6;
void main(){
char * test = "Hello World";
int x = 5;
int* k = &x;
}
```

Code 1: C code for understanding read/write access of .data section

Integers i and j defined outside of the main will be stored in the data section as read-write, whereas the string literal, “Hello World,” and integer value 5 will be stored as read only. The pointer variables test and k will be stored in the read-write area.

.code section (.text section)

The .code section is a crucial section of the program that contains executable assembly instructions. It is a fixed-size section, but – unlike the .data section – the .code section is read only. However, the architecture supporting the self-modifying code can remove the read-only constraints of this section, and this functionality allows for virus programming [1]. The position-independent code of this section can be shared in memory across various processes. This section is the most interesting section in reverse engineering, as it contains the actual logic and code behind the software [14]. Hence, it becomes the source of input for the decompilation process. The input to the algorithm discussed in this paper is the code section extracted from the PE.

2.3 Assembly language

The decompiling process starts from the machine code or the assembly code, with source code as the final output. Even if it is a machine code decompiler, decompiling from machine code to assembly code is much simpler than the second stage, which is the conversion of assembly code to high-level language [4]. Hence, this section deals with the basic introduction of the assembly language and x-86 instruction set.

Assembly language is a low-level language for programming hardware like the CPU, integrated chips, and microcontrollers [7]. An assembly language is simply a machine-specific and non-portable symbolic representation of the underlying machine code that can be interpreted by a machine [7]. The symbols are called mnemonics, and are designed by the manufacturer of the hardware. An assembler is basically a utility that does the same job as a compiler does for high-level languages [8] – it translates the mnemonics into respective binary sequences. Higher-level assemblers, like those installed in computers, convert assembly instructions into object code rather than machine code. The object code consists of opcodes for all assembly instructions, instead of the binary sequence [8]. This approach is adopted because of the large amount of

instruction sets for computers compared to other devices. Some of the notable assemblers are MIPS, SPARC, and x86. This paper deals with the latter, x86.

x86 Assembler

This assembler is based on the 8086 assemble architecture of the Intel processor. It is supported by Intel, AMD, and VIA processor-based systems. Operating systems like Windows, Linux, and MAC-OSX support this assembler as well. Two versions – x86(32) 32-bit, and x86(64) 64-bit – are available based on the processor cores [8].

x86 performs two passes on an assembly code. The first pass parses the source code to create a table with all the unresolved symbols. The second pass uses this information to resolve the address. This architecture lets you use undeclared symbols in your code, as opposed to one-pass assemblers which do not [8].

x86 Instruction Set

The x86 instruction set is designed for Intel and AMD processors, and is backwards-compatible with the following previous versions designed by Intel: 80186, 80286, 80386 and 80486 [8].

x86 processors use different registers for storing values [7]. They are,

- Special registers AX, BX, CX, and DX
- IP (Instruction Pointer)
- Flags like carry, sign, zero, and many others.
- Segment registers CS, DS, ES, FS, GS, and SS, for representing the six different sections, such as Code, Data, Stack, and Extra.

x86 instructions are divided into five different categories based on their functionality:

1) Stack Instructions
    - These instructions deal with the stack manipulation of the processor.
    - Instructions like PUSH, POP, CALL, and RET come under this category.

2) Integer ALU Instructions
    - These instructions deal with mathematical calculations, logical operations, and shift operations.

- Arithmetic instructions: ADD, SUB, and MUL.
- Logical instructions, such as XOR, AND, and OR.
- Shift instructions: ROL, ROR, RCL, and RCR.

3) Floating Point Instructions
    - These instructions deal with more complex mathematical operations, like square root, division, and modulo, with floating point.

4) SIMD Instructions
    - These instructions can perform several calculations in parallel in SIMD registers. These are supported by modern x86 processors only.

5) Data Manipulation Instructions
    - These instructions are used for accessing the data in the memory from the different sections using various addressing modes.
    - MOV, ENTER, and LEAVE

Assembly instruction format

Each line of code in the assembly language is one instruction. This pass reads it as a string. All assembly instructions follow a specific format, unlike high-level programming language. This format consists of four sections that are common throughout the whole assembly code:

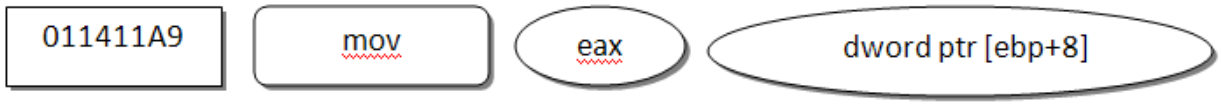

Figure 2: Assembly instruction format

Each string contains,

1) Memory location
2) Assembly instruction
3) Operand 1 (optional)
4) Operand 2 (optional)

3. Decompilation

In the previous chapter we discussed the fundamentals of forward and reverse engineering. Decompilation is a process of reverse engineering, and the main focus of this research. This chapter focuses on the benefits and problems of decompiling, and the types of decompilers and present available tools. Decompilation is, and always will be, unable to achieve a 100% success rate, because of many factors discussed in later sections [1] [3] [4]. There are many different compilers available today for a programming language [32][23]. Each is implemented to handle the source code differently in order to produce the most optimized assembly code for the underlying machine. In addition, high-level programming languages are growing faster and faster compared to their origins, with the inclusion of more libraries to build complex software to satisfy new and growing requirements [23].

The most important requirement expected from a decompilation process is the human readability of the decompiled output [3]. Often, the assembly code is too difficult to understand even for the developer of the source code himself. Even the assembly code of a small application like "Hello World" would take a few minutes to understand. The output of this process should be much smaller than the assembly code, and should not contain any irrelevant details of the hardware, memory access, or operating system interactions. There is not a tool, yet, to achieve all of these requirements [1].

3.1 Benefits of Decompiling

Even if the results of the decompiling process are not fully accurate to the original source code, there are some benefits to this process as well. These benefits apply to three categories, depending upon their application [1].

1) Analyzing
2) Error checking and Evaluation
3) Updating and Optimization

Analyzing

Reverse engineered source code can be used to learn the underlying algorithm and design principles incorporated in the program [1]. This information can be used to develop a new code with a better design and more efficient algorithm. Even if the software uses a very powerful security algorithm at high-level programming, the most complex part of the algorithm when compiled to assembly code is converted to a series of granular-level instructions [9]. To overcome this security, a hacker needs to change only a very few instructions. As in this example, by only changing one assembly instruction the hacker could make the number of free trials offered by the software unlimited.

```
0041430E  . 385C24 23     CMP BYTE PTR SS:[ESP+23],BL
00414312  .v0F84 72010000 JE MP3_WAV_.0041448A
00414318  . 53            PUSH EBX
00414319  . 6A 40         PUSH 40
0041431B  . 68 38CA4200   PUSH MP3_WAV_.0042CA38          ASCII "Dear user you have converted 5 mp3 songs to wave using th
00414320  . E8 97CA0000   CALL <JMP.&MFC42.#1200>
00414325  . 899E E8000000 MOV DWORD PTR DS:[ESI+E8],EBX
0041432B  . 893D 10D64200 MOV DWORD PTR DS:[42D610],EDI
00414331  . 53            PUSH EBX
```

Figure 3: Assembly code snippet of an algorithm checking the number of free trials used in the software

The decompiler can help the developer to understand this assembly language, and therefore to program accordingly at high level. The developer can make the required changes to protect the vital information in the assembly code.

Error checking and Evaluation

There are several bugs that remain undetected in high-level programming languages that can be discovered by a careful analysis of the registers and stacks while debugging the assembly language [10]. Infusing a viral code into the empty sections of an executable is a very common method of attack used by virus developers around the globe. The decompilation process can help distinguish foreign code from the original source code. A good example of this would be Cheat Engine, an auto-assembler tool for injecting code into running processes that supports the x86 assembly instruction set. Cheat Engine is used in multiplayer gaming clients to manipulate player levels and awards.

An ideal decompiler would produce the identical source code of two different assembly languages having the same logic [4]. This feature could be used to detect copyright

infringements. Other applications for the decompiler include bug fixes, finding vulnerabilities, interoperability, signature detection, and code comparison.

Updating and Optimizing

When source code is compiled, the compiler performs a number of optimizations on the code to achieve the best performance from the machine. The reversed source code can be studied to understand the optimizations performed by the compiler [1]. This information is helpful in optimizing the code in high-level programming language itself. Also, possible modules that need new updates and optimizing can be checked. Considering the following code:

```
if (4>5){
     printf ("This will never execute");
}
```

Code 2: Unoptimized high-level code

The compiler will remove the above code when generating the assembly code, as this if statement is logically incorrect and execution will never print the statement.

3.2 Decompiler problems

Most of the decompiling tools in use today face common problems. In this section, we discuss the major problems of this process, considering C as both the original source language and the target language. These problems make the decompilation process impossible because of the way high-level languages are structured. Overcoming such problems requires a change in the process of forward engineering.

3.2.1 Information loss

The compiler performs code optimization, semantic analysis, lexical analysis, code generation, and preprocessing. As a result, a great deal of information embedded in the source code is lost. This information can be manually handled, but reversed code loses the originality and feel of the source code. Information lost during compilation is as follows:

1) Complex mathematical expressions

2) Global and local variable names

3) Object-oriented code

4) High-level programming syntax

5) Structural programming

6) Comments

7) Data types

The below example consists of original C code and compiler-generated assembly code. It demonstrates the substantial loss of information in compilation described above.

Original C code

```
void __cdecl Test2a ( int a, int b )
{
    if ( a < b )
        printf ( "a < b\n" );
    else
        printf ( "a >= b\n" );
}
```

Code 3: Code before compilation

Assembly code

```
01141250  push        ebp
01141251  mov         ebp,esp
01141253  sub         esp,40h
01141256  push        ebx
01141257  push        esi
01141258  push        edi
01141259  mov         eax,dword ptr [ebp+8]
0114125C  cmp         eax,dword ptr [ebp+0Ch]
0114125F  jge         01141271
01141261  push        1145720h
01141266  call        dword ptr ds:[1148248h]
0114126C  add         esp,4
0114126F  jmp         0114127F
01141271  push        1145728h
01141276  call        dword ptr ds:[1148248h]
0114127C  add         esp,4
0114127F  pop         edi
01141280  pop         esi
01141281  pop         ebx
01141282  mov         esp,ebp
01141284  pop         ebp
01141285  ret
```

Assembly code 1: Example of assembly code depicting information loss

3.2.2 Separation of .code and .data sections

A high-level programming language consists of two sections, .code and .data. Both are seamlessly merged throughout the code. Consider a code section as the core logic involving math operations, and a data section as variable values, strings, and constants [10]. When compiled, the assembly code separates this information into two different sections before embedding it into a portable executable. The data section is then referred to by the code section of the assembly through the memory address where this data is stored. It is difficult to merge these two sections to their original form during the decompilation process [1] – the unavailability of the corresponding data of the code section requires assumptions in the process, and hence the output generated is not reliable. These problems arise because C follows an approach of defining all items before using them. The compiler then knows what to extract from the source code for the data section.

Consider the following C code, in which the data contained in the string passed to printf is unavailable in the code section of the respective assembly language. This function call is converted to ***call dword ptr ds:[1148248h]*** in the assembly code.

Original C code

```
void test ( int a, int b )
{
    if ( a < b )
        printf ( "a < b\n" );
}
```

Code 4: C code example containing data within code

Assembly code

```
01141210  push    ebp
01141211  mov     ebp,esp
01141213  sub     esp,40h
01141216  push    ebx
01141217  push    esi
01141218  push    edi
01141219  mov     eax,dword ptr [ebp+8]
0114121C  cmp     eax,dword ptr [ebp+0Ch]
0114121F  jge     0114122F
01141226  call    dword ptr ds:[1148248h]
0114122C  add     esp,4
0114122F  pop     edi
01141230  pop     esi
01141231  pop     ebx
01141232  mov     esp,ebp
01141234  pop     ebp
01141235  ret     8
```

Assembly code 2: Loss of data in .code section

3.2.3 Differentiating original pointers from address offsets

Assembly language is ambiguous in differentiating between the actual pointer variables – used to store an address or the starting address of a dynamic memory allocation in a high-level code – and the offset pointers that point to an address offset from the actual pointer [1].

Consider the following 2 cases:

Pointer offset outside the bounds of array

```
int numbers [5] = {1, 1, 1, 1, 1};
for(int i = -5, i < 0; i ++){
     printf("%d", a + i);
}
```

Code 5: Code example for pointer offset outside the bounds of array

Pointer offset inside the bounds of array

```
int numbers [5] = {1, 1, 1, 1, 1};
for(int i = -5, i < 0; i ++){
     printf("%d", a + i + 5);
}
```

Code 6: Code example for pointer offset inside the bounds of array

This type of code produces the same assembly output, but when reverse engineered only the second case will produce the closest corresponding C code to the original source code [2]. This is because the second case is still logically inside the array index bounds, while the first case is not at all accessing the array elements [23]. Without the compiler and linker differentiating between the original pointer and the offset, it is impossible to determine the offset for a reverse engineering tool just from the pointer variable [32].

3.2.4 Detecting constants from the pointers

The other major problem faced by reverse engineering tools is distinguishing pointers from constants [1]. The operand following the assembly instruction is treated as a constant, which can be any data type – an integer or a float. But, it can also be a pointer variable to a data stored

somewhere in the memory instead of the data itself. This problem can be considered as the first hurdle towards differentiating offsets and actual pointers. Using actual data or an address from a .data section that contains the data is decided by the compiler based on the optimization setting [8].

3.3 Limitations

Though decompilers can be used for a variety of benefits, achieving those benefits requires considerable manual intervention and numerous assumptions during the process. These assumptions can sometimes lead to a faulty code and an even more complex structure. Also, if time is a constraint, manual intervention is impossible for larger codes. The primary existing limitations that need to be addressed while designing a decompiler are as follows: [1]

- Handling of direct or indirect function calls
- Handling of direct or indirect jump calls
- Handling type casting and recovery
- Stack pointers or memory references
- Function and variable names
- Merging code and data sections

The only advantage of reverse engineering over forward engineering is its full scope over the entire application.

3.4 Types of Decompilers

Decompilers can be summarized into three different types. Each has its own difficulty level and constraints. These difficulties arise based on the desired input and output [4], while constraints are present due to the information loss and the optimizations performed by the compiler. Tools that reverse the actions of linkers and disassemblers are currently available, with highly-dependable results. IdaPro and OllyDbg are considered to be the best of them [4].

Many attempts and much research has suggested the use of different decompilers. However, these tools are unable to produce results that can be compiled or even be understood by humans [3][4]. This section categorizes different decompiler tools and gives a few examples of each. The

most important of these, and the one that this paper deals with, are machine code decompilers. A more detailed explanation with results analyzed from the currently-available machine code decompilers is also presented.

Virtual machine decompiler

A fine example of the virtual machine decompiler is the Java bytecode decompiler. The Java bytecode decompiler has achieved a success ratio near 90%, as the Java byte is rich with metadata to allow negligible information loss. Most of the complex information – such as variable names, separation of code and data section, type analysis, and global data – is explicitly visible in bytecode [1].

There exist a few challenges with the virtual machine decompiler, too, but these have already been resolved to an extent. Optimized bytecode, code obfuscation, and subtypes of basic datatypes are a few of these difficulties.

Virtual machine decompilers enjoy the best position because their input is rich with metadata, which is vital for the decompiling process. Here is a list of some professional virtual machine decompilers:

1) JAD Decompiler [28]
2) JReverse Pro [29]
3) JODE Decompiler [27]
4) McGill's Decompiler [26]

Object code decompiler

An object code decompiler takes the machine code and generates the intermediate object files between the machine code and assembly code [31]. Though theoretical only, these decompilers are better than machine code decompilers but worse than assembly code decompilers in terms of achievability [1] [3]. The object code decompiler does not benefit from much research focus, as its final output is object code that serves no major importance in reverse engineering [1]. As such, very few of these decompilers have been researched. The most noteworthy object code decompilers are Winger and Schneider [30] and Decomp [31]. Both were created with very limited functionality and for specific purposes only.

The machine code decompiler discussed in the next section is a multi-process decompiler. One of its processes has the same functionality as an object code decompiler – reversing the machine code – but the final output of a machine code decompiler is assembly code, not object code [4]. This process is beyond the scope of this paper and not discussed in detail.

Machine code decompiler

Machine code decompilers have attracted the most research from enthusiast reverse engineers since the origin of programming language. Since these decompilers are based directly on the underlying platform (that is, hardware), these are the most difficult decompilers to create. A universal decompiler is also not achievable even in theory [1]. Even with the constant evolution of high-level programming languages and the hardware that processes machine code, these decompilers still have not reached a level to be able to extract even 10% of the original source code [32]. The two processes of the machine code decompiler are disassembling and decompiling, but we concentrate on the decompiling process here. A few noteworthy research machine code decompilers are listed below. The first three are the most successful, and are discussed in more detail later in this paper.

1) Boomerang [1]
2) Dcc [5]
3) REC [6]
4) Exec -2-C [20]
5) DisC [25]
6) DesQuirr [16]
7) Yadec [17]
8) Andromeda [18]
9) HexRays [19]

3.5 Present decompiler tools

For decompiling a portable executable compiled with most commonly-known compilers – Borland C++, Dev C++, Microsoft Visual C++, and Turbo C – there are very few decompilers available that perform this process with considerable success ratio [3][4]. These are Boomerang, REC, and dcc [3]. There have been many other decompiler tools prior to this, but they were more

like research tools that perform only in a controlled environment. They are classified based on their category in the next chapter. As we are interested in C code generation, only these three most functional tools match our criteria.

Boomerang

Boomerang is an open-source machine code to C decompiler. It tries to alter the semantics of each of the assembly instructions, and implements the Static Single Dataflow Analysis to achieve its goal [1]. This makes it independent of the compiler optimizations performed on the assembly code. Boomerang's approach to this process includes implementing a very powerful internal representation (IR), which then tries to recreate each and every step of the compiler while parsing the assembly code. However, the results on the Hello World program were either inefficient or not even close to the original, and the process is quite time-consuming. The algorithm described in this paper adopts these concepts from Boomerang, but they are modified to produce better results. The internal representation of symbols is critical for implementing a decompiler algorithm, as the assembly code is very granular and we cannot be sure about each symbol as we encounter them in passes.

REC

REC is a machine code decompiler that recognizes not only Win32 executables but also other formats of Linux, Solaris, and Playstation PS-X executables. The output generated is C-like, and requires manual editing to recompile [5]. Though the output produced by REC is very close to C code, the decompiler has many constraints. The REC decompiler is heavily compiler-dependent, supporting Win32 executables (portable executables) compiled by Microsoft Visual C++ 6 and Microsoft Visual Basic 5. The algorithm relies on the information available from the executable symbol table, which varies per compiler settings. It performs poorly if the executable is created without debugging information files like the program data base (.pdb) or the code view (.c7).

Dcc

Dcc is a research decompiler that decompiles only 80286 DOS-based executables to C language [6]. The Dcc approach to decompilation is based on graph theory and optimization techniques adopted by compilers. These compiler optimization techniques eliminate high-level

programming constructs and generated intermediate assembly instructions using registers. Dcc tries to follow the same approach in a reverse order. Dcc is also a three-pass decompiler, where the first pass is a machine code decompiler that generates assembly, the second pass generates intermediate symbol tables by performing code flow and data flow analysis, and the third pass generates the output, which resembles C like code. The algorithm described in this paper follows a three-pass, but the functionalities implemented at each pass are completely different from those of this tool. The machine code decompiler is beyond the scope of this research, but graph representation of the control flow is adopted in this paper.

Comparison of Dcc and REC

The table below compares different aspects of the two best available decompilers on a scale of 0 to 10, with 0 being the worst performance and 10 being the best [1].

Table 3: Comparison of Dcc and REC

Test Case	Dcc	REC
Large Executables	5	0
Parameters Handling	7	5
Handling Returns	7	5
Jumps	9	5
Function Calls	7	0
Type casting	7	0
Total	42	15

5. Decompiler algorithm

This section deals with the main algorithm behind the decompiling process implemented in this paper. The algorithm is a three-pass algorithm: raw view, parsed view, and recognized view. Raw view deals with reading the assembly language from the .DIS file. This output is still very difficult to handle within the algorithm. Parsed view generates the vector of strings in a specific format that can be understood by the algorithm. The third pass, recognized view, contains the algorithm that reads one assembly line at a time and generates the pseudo C code. The algorithm is implemented in C language using the Microsoft Visual C++ compiler. Code optimization options of the compiler are disabled.

5.1 Initial Preparation

A wide range of test functions – including different implementations of C basic syntax like for loop, while loop, if/else (simple and complex), switch case, and math instructions – were created using Microsoft visual C++ compiler. Compiler optimizations were disabled for creating these test cases, as it is trivial for the algorithm to have the complete assembly of the logic, which may contain assembly instructions that would otherwise have been omitted by the compiler optimization.

Calling Conventions

A calling convention is used to determine how different platforms parse different functions, how their parameters are received and handled, and how results are returned from the function. Different programming languages use different calling conventions. All test cases were created using three different calling conventions: _stdcall, _cdecl, and _fastcall. These calling conventions are provided by the Microsoft Visual C++ compiler, and are considered in this research because they play an important role in how the assembly code handles parameters, stack operations, and registers. The example below explains different calling conventions in detail. First consider the below C code where XX can be substituted with _stdcall, _cdecl and, _fastcall keywords.

Original C code

```
void XX Test1b ( int a, int b )
{
    if ( a < b )
      printf ( "a < b\n" );
}
```

Code 7: Function calling convention

1) _stdcall

Parameters passed to the function are pushed to the stack in reverse order. The function accesses these parameters from the stack, and the stack cleans operations after the function execution is handled by the callee.

```
01141210  push        ebp
01141211  mov         ebp,esp
01141213  sub         esp,40h
01141216  push        ebx
01141217  push        esi
01141218  push        edi
01141219  mov         eax,dword ptr [ebp+8]
0114121C  cmp         eax,dword ptr [ebp+0Ch]
0114121F  jge         0114122F
01141221  push        1145720h
01141226  call        dword ptr ds:[1148248h]
0114122C  add         esp,4
0114122F  pop         edi
01141230  pop         esi
01141231  pop         ebx
01141232  mov         esp,ebp
01141234  pop         ebp
01141235  ret         8
```

Assembly code 3: _stdcall calling convention

2) _cdecl

This calling convention is the same as _stdcall, except that the stack cleanup operations are performed by the caller. It is clearly visible in the example below that the function does not return anything, as the results are stored in the stack.

```
011411A0  push        ebp
011411A1  mov         ebp,esp
011411A3  sub         esp,40h
011411A6  push        ebx
011411A7  push        esi
011411A8  push        edi
011411A9  mov         eax,dword ptr [ebp+8]
011411AC  cmp         eax,dword ptr [ebp+0Ch]
011411AF  jge         011411BF
011411B1  push        1145720h
```

```
011411B6  call        dword ptr ds:[1148248h]
011411BC  add         esp,4
011411BF  pop         edi
011411C0  pop         esi
011411C1  pop         ebx
011411C2  mov         esp,ebp
011411C4  pop         ebp
011411C5  ret
```

Assembly code 4: _cdecl calling convention

3) _fastcall

_fastcall stores the parameters in the registers ECX and EDX. This type of calling convention is used to increase the performance of the function, as register access is faster than stack access. This convention also does not have any function returns.

```
011411D0  push        ebp
011411D1  mov         ebp,esp
011411D3  sub         esp,48h
011411D6  push        ebx
011411D7  push        esi
011411D8  push        edi
011411D9  mov         dword ptr [ebp-8],edx
011411DC  mov         dword ptr [ebp-4],ecx
011411DF  mov         eax,dword ptr [ebp-4]
011411E2  cmp         eax,dword ptr [ebp-8]
011411E5  jge         011411F5
011411E7  push        1145720h
011411EC  call        dword ptr ds:[1148248h]
011411F2  add         esp,4
011411F5  pop         edi
011411F6  pop         esi
011411F7  pop         ebx
011411F8  mov         esp,ebp
011411FA  pop         ebp
011411FB  ret
```

Assembly code 5: _fastcall calling convention

5.2 Algorithm

Figure 4 depicts the flowchart of the decompiler algorithm explained in this paper. All three different passes and their sub-modules are explained in further sections of this chapter. The background information required to understand this algorithm has been provided in previous chapters. Each of these passes is explained with one test case.

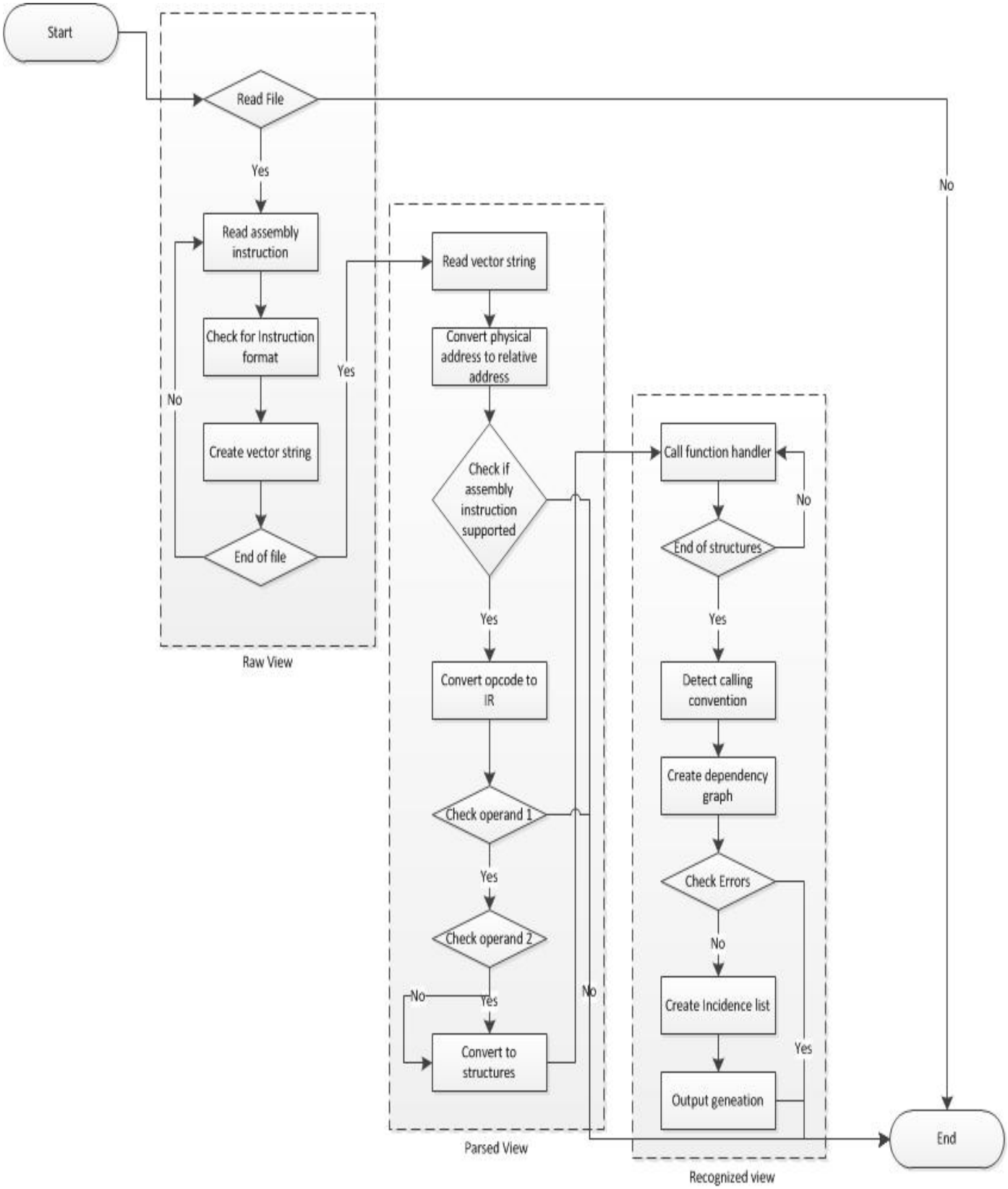

Figure 4: Decompiling algorithm flowchart

5.1 First Pass – Raw view

This pass deals with reading the assembly language from the .dis file and storing it in a vector of strings. Each string is one assembly instruction read from the file in the specific format of memory address, assembly instruction, operand 1, and operand 2. Each instruction follows this specific format and order, and hence can easily be read using regular expressions. Instruction prefixes and three-operand instructions are currently unsupported. Operand 1 and operand 2 are separated by a comma delimiter, and operand 2 is optional for some instructions. This pass detects if the input assembly file contains any errors. If so, the algorithm is terminated and a corresponding error message is displayed.

5.1.1 Raw view example

This section describes an example of the complete run of this pass along with the format in which the assembly instruction is read.

Consider the following input assembly code:

```
011411A0  push        ebp
011411A1  mov         ebp,esp
011411A3  sub         esp,40h
011411A6  push        ebx
011411A7  push        esi
011411A8  push        edi
011411A9  mov         eax,dword ptr [ebp+8]
011411AC  cmp         eax,dword ptr [ebp+0Ch]
011411AF  jge         011411BF
011411B1  push        1145720h
011411B6  call        dword ptr ds:[1148248h]
011411BC  add         esp,4
011411BF  pop         edi
011411C0  pop         esi
011411C1  pop         ebx
011411C2  mov         esp,ebp
011411C4  pop         ebp
011411C5  ret
```

Figure 5: Raw view input

The algorithm reads the assembly code line-by-line to the end of file, in order to generate a vector of strings in the format shown below:

Table 4: Assembly instruction string format

Memory address	Instruction	Operand 1	Operand 2
011411A9	mov	eax	dword ptr [ebp + 8]

5.2 Second Pass – Parsed view

This pass deals with generating an intermediate representation from the raw view for the algorithm, which is very easy to handle and manipulate by logic during the recognized view. The output of raw view consists of a vector of strings that is very difficult to handle in programming logic because it involves string manipulation functions. This step takes the vector of strings as input and generates an IR better suited for the algorithm to understand the input assembly and to generate the pseudo C output. This step has no major role in the core logic of the decompilation process, but it makes the algorithm more robust and increases overall performance.

This step performs three major operations on the assembly code from the raw view. They are explained below in the order they are performed.

Conversion of vector strings to structures

The raw input consists of strings corresponding to each assembly instruction from the initial input. These strings contain the most important details that will be used by the recognized view. However, handling the strings in a complicated algorithm can be very tedious and non-optimized programming; so, this step tries to solve this problem by converting each string into a C structure that can then be used in the logic very efficiently. The structure of this C struct is as follows:

```
typedef struct _RECOGNIZED_INSTRUCTION
{
    ULONG_PTR  AbsoluteAddress;
    ULONG_PTR  RelativeAddress;
    UINT       InstructionId;
    OPERAND    Operand1;
    OPERAND    Operand2;
} RECOGNIZED_INSTRUCTION, *PRECOGNIZED_INSTRUCTION;
```

Code 8: Recognized instruction C structure

Relative Addressing

From the previous section, we have seen that an assembly instruction contains a memory location. This memory location is the actual location of that instruction when the executable is loaded into memory. These locations are of critical importance to the algorithm because the

assembly language processes loops and execution flows based on these addresses. The memory location of the successive instruction is added to the instruction size of the previous instruction; so, it can be derived that the memory locations are successive in memory. Their initial starting point depends on the operating system, and is likely to change on every execution run. But, since this algorithm focuses on decompilation on a smaller scale, those factors are not of much concern.

The locations are eight digits long, but the first half will likely be the same for each instruction unless the executable is very large. Again, this is constrained in our algorithm, so the important parts from the location for our algorithm are the lower-order bits. Since the input assembly is not the complete assembly of the executable, but only the section of it that we are interested in decompiling, the actual address can be replaced by the relative address as long as we preserve the instruction size.

Instruction ID

The algorithm covers a specific set of instructions from the Intel x86 instruction manual [12]. This step assigns a constant value to each of the instructions in the raw view. Assigning an integer value to the string helps us to identify the instruction in the complex logic through conditions rather than string comparisons. The raw view pass has already detected if the code consists of unsupported instructions – the execution reaches this pass only with supported instructions. The instructions supported by the algorithm are as follows:

Table 5: Supported assembly instructions

Functionality	Instructions
Math Operations	Fld, Fadd, Fstp, Fsub, Fmul, Fdiv, Imul, Add, Sub
Stack Operations	Push, Pop
Function Operations	Ret, Call
Jump Operations	Ja, Je, Jle, Jge, Jne, Jmp
General-Purpose Operations	Cmp, Mov

5.2.1 Parsed view example

This example shows the changes made by parsed view to the input assembly code:

Input assembly code to the parsed view

```
011411A0  push        ebp
011411A1  mov         ebp,esp
011411A3  sub         esp,40h
011411A6  push        ebx
011411A7  push        esi
011411A8  push        edi
011411A9  mov         eax,dword ptr [ebp+8]
011411AC  cmp         eax,dword ptr [ebp+0Ch]
011411AF  jge         011411BF
011411B1  push        1145720h
011411B6  call        dword ptr ds:[1148248h]
011411BC  add         esp,4
011411BF  pop         edi
011411C0  pop         esi
011411C1  pop         ebx
011411C2  mov         esp,ebp
011411C4  pop         ebp
011411C5  ret
```

Assembly code 6: Parsed view input

Output generated by parsed view

```
Parsed view >>

00 : [0x011411A0] ( +0x00 ) : [push] [ebp] []
01 : [0x011411A1] ( +0x01 ) : [mov] [ebp] [esp]
02 : [0x011411A3] ( +0x03 ) : [sub] [esp] [0x40]
03 : [0x011411A6] ( +0x06 ) : [push] [ebx] []
04 : [0x011411A7] ( +0x07 ) : [push] [esi] []
05 : [0x011411A8] ( +0x08 ) : [push] [edi] []
06 : [0x011411A9] ( +0x09 ) : [mov] [eax] [ebp+0x8]
07 : [0x011411AC] ( +0x0C ) : [cmp] [eax] [ebp+0xc]
08 : [0x011411AF] ( +0x0F ) : [jge] [0x11411BF] []
09 : [0x011411B1] ( +0x11 ) : [push] [0x1145720] []
10 : [0x011411B6] ( +0x16 ) : [call] [0x1148248] []
11 : [0x011411BC] ( +0x1C ) : [add] [esp] [0x4]
12 : [0x011411BF] ( +0x1F ) : [pop] [edi] []
13 : [0x011411C0] ( +0x20 ) : [pop] [esi] []
14 : [0x011411C1] ( +0x21 ) : [pop] [ebx] []
15 : [0x011411C2] ( +0x22 ) : [mov] [esp] [ebp]
16 : [0x011411C4] ( +0x24 ) : [pop] [ebp] []
17 : [0x011411C5] ( +0x25 ) : [ret] [] []

>> End of parsed view
```

Figure 6: Parsed view output

5.3 Third Pass – Recognized view

This pass contains the core logic of the algorithm and deals with parsing the parsed view and creating pseudo C code. This process can be broken down into a number of steps, each

performing different specific operations from the input received from the previous step. Each decompilation process in the algorithm follows these steps:

1) Stack initialization and analysis
2) Register initialization and analysis
3) Graph generation
4) Output generation

5.3.1 Stack initialization and analysis

Each function call in the assembly language generates a few stack instructions before executing the function logic. These stack instructions contain important information – calling convention used, number of parameters, and their values and function return location. This step analyzes these instructions and captures the most important information needed for the further steps in the algorithm.

The initialization of the stack structure helps us to determine our calling convention and parameter information.

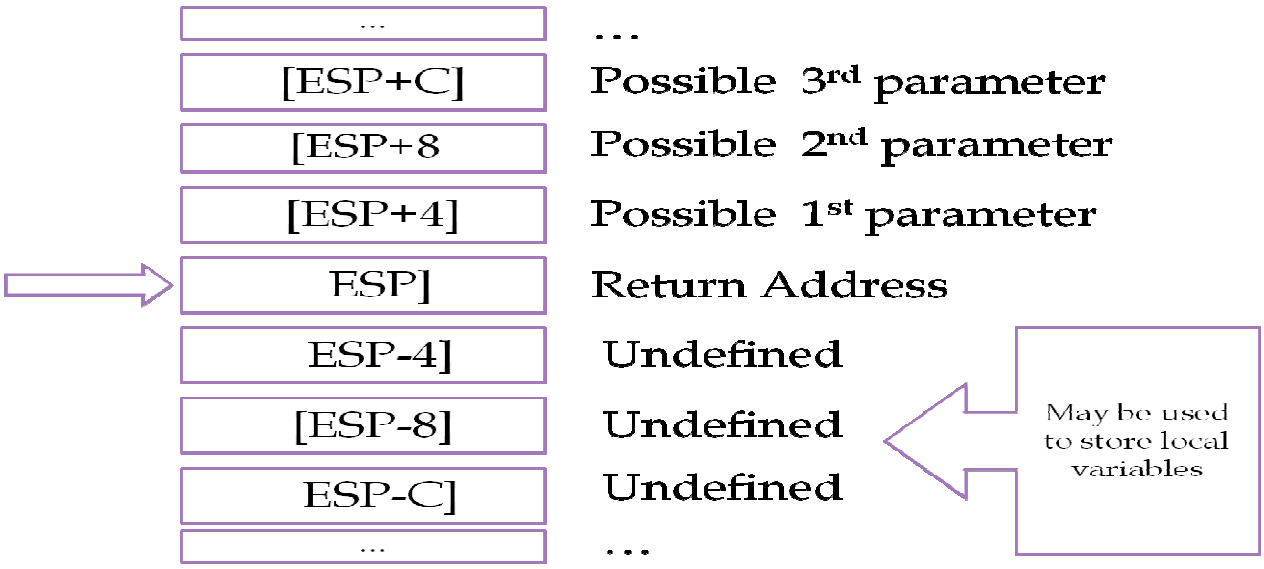

Figure 7: Stack initialization

The use of ESP determines whether the calling convention used was _cdecl or _stdcall, but it cannot still be determined as differentiating them based on the RET instruction. As in the _cdecl calling convention, the caller cleans up the stack after a successful function call; in _stdcall, the callee pops the parameters from the stack. Also, each parameter passed to the stack takes 4 bytes of memory space. This helps us determine the number of parameters used in the underlying logic. The space below the stack pointer helps us determine the number of local variables created by the function.

5.3.2 Register initialization and analysis

Intel x86 uses eight general purpose registers for executing assembly instructions. These registers are used by the processor for an immediate reference, as accessing these registers is faster than physical memory. The analysis of these registers helps determine the _fastcall calling convention and the intermediate values used while performing the calculation. The _fastcall calling convention uses ECX and EDX registers for storing the parameters passed to the function. EAX and EBX are used for immediate calculation and storing intermediate values [12].

We recorded the states of each register during the course of the algorithm whenever the assembly instruction refers to keywords related to registers. The initialization of the registers is as follows:

EAX	Undefined
EBX	Undefined
ECX	Unknown, may be parameter
EDX	Unknown, may be parameter
ESI	Undefined
EDI	Undefined
ESP	Unknown, current stack location
EBP	Undefined

Figure 8: Register initialization

ECX and EDX help determine the parameters passed to the function and the calling convention used, while EAX and EBX are useful during analysis of the loop counters and other immediate variables used in the assembly instruction.

5.3.3 Graph Generation

This is the most critical and essential part of the algorithm, determining the high-level programming language syntax from the underlying assembly language. This step reads the most steps of the raw view at a single time compared to any other steps in the algorithm, and hence is the most important step of this research paper.

Each supported assembly instruction has a function handler, which contains the logic on how to handle the specific assembly instruction. Some assembly instructions are standalone, and are most equivalent to their respective C instructions in terms of granularity – for example, MOV. However, most assembly instructions are highly dependent on further instructions to provide simple instructions in high-level programming language. Each of these function handlers contains the logic on how to handle its own assembly instruction, and each handler sets the flags accordingly for the further steps of the algorithm.

Based on the information returned from these function handlers, the next process helps us determine the more complex C syntaxes, like loops. This step generates dependency graphs and semantic loads by virtually executing each assembly instruction [10]. The semantic load helps us to determine the loop counters, and dependency graphs determine the type of structure of execution, like for loop, switch, or if/else. We do not differentiate between for loops and while loops, since that information is lost during compilation – all for loops can be represented by while loops, so this is not a major constraint to this step. Figure 9 shows the different function handlers implemented into this algorithm. The algorithm is designed in this manner to allow easy implementation of support for more instructions in the future. Any instruction to be supported in this algorithm must have a function handler defined in this section of code, and the logic to be implemented in its function handler.

```
static INSTRUCTION SupportedInstructions[] =
{
    { L"add", AddHandler },
    { L"call", CallHandler },
    { L"cmp", CmpHandler },
    { L"ja", JaHandler },
    { L"je", JeHandler },
    { L"jge", JgeHandler },
    { L"jle", JleHandler },
    { L"jne", JneHandler },
    { L"jmp", JmpHandler },
    { L"imul", ImulHandler },
    { L"mov", MoveHandler },
    { L"pop", PopHandler },
    { L"push", PushHandler },
    { L"ret", RetHandler },
    { L"sub", SubHandler },
    { L"fld", FldHandler },
    { L"fadd", FaddHandler },
    { L"fstp", FstpHandler },
    { L"fsub", FsubHandler },
    { L"fmul", FmulHandler },
    { L"fdiv", FdivHandler }
};
```

Code 9: Supported instructions' function handlers

Every assembly instruction is treated as a vertex of the graph, and execution flow can be considered an edge to build this dependency graph [21]. The beginning and end of the function are also considered vertexes. We do not consider the stack and register operations, as they are already handled by the previous steps of this pass. We use this graph to build the incidence list.

Below is the complete example of original C code with nested if along with the respective dependency graph and incidence list and its interpretation:

Original C code

```
If(a > 4){
    If( a != 5){
          Foo();
     }
 }Return;
```

Code 10: Nested if

Dependency graph for nested if

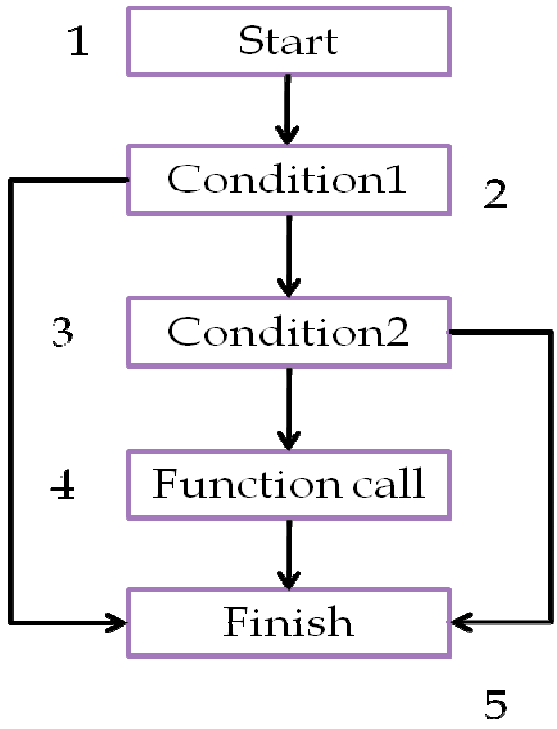

Figure 9: Nested if dependency graph

This graph can help us build the incidence lists. Incidence lists are very convenient for recognizing high-level programming structures [22]. The incidence list for the above graph would be,

(1, 2)

(2, 3), (2, 5)

(3, 4), (3, 5)

(4, 5)

Interpretation of incidence list

(2, 3), (2, 5) represents if condition a>5

(3, 4), (3, 5) represents the nested if condition a != 5

(4, 5) represents the end of the if condition with both if clauses satisfied

If-then detection

If the case is only if-then, then we have a different graph compared to mixed if-then and nested ifs. In order to identify if-then, we have to detect the following graph pattern and ensure that there is no external reference to (x+1).

Dependency graph

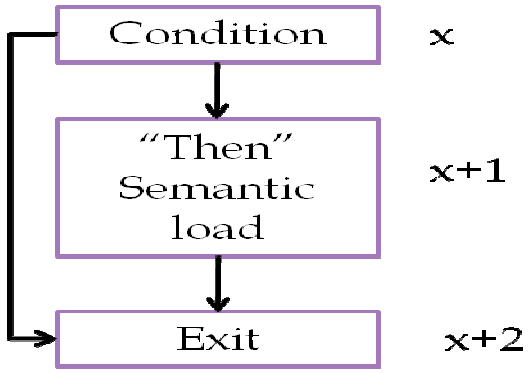

Figure 10: If-then dependency graph

Incidence list

(x, x+1)

(x, x+2)

(x+1, x+2)

Interpretation of incidence list

(x, x+1) represents inside the if condition

(x, x+2) represents outside the else condition

(x+1, x+2) represents the end of the if condition with the if clause dissatisfied

If/else detection

Detecting if/else is very similar to previous cases, except for the difference in the incidence list. If we have an if/else inside an if, that makes a compound if statement and we can replace two if/elses with one condition. We must do that to eliminate all ifs.

Dependency Graph

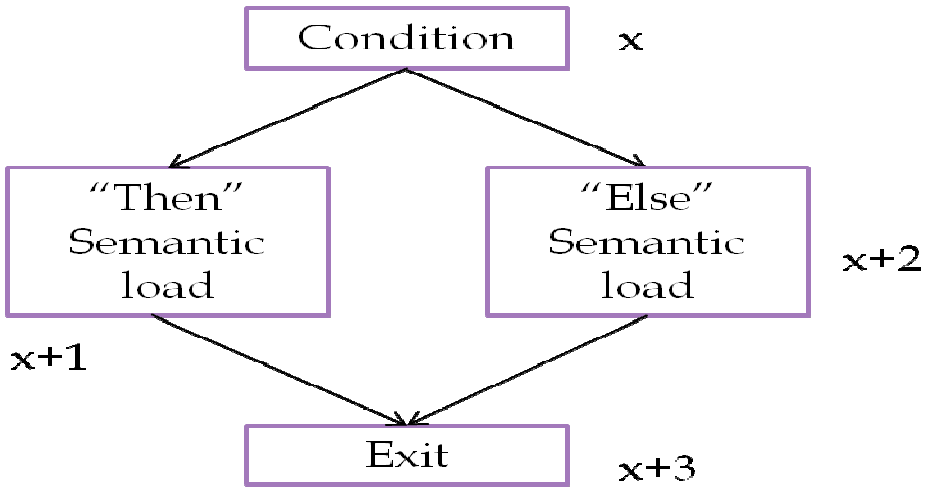

Figure 11: Dependency graph for if/else

Incidence list

(x, x+1)

(x, x+2)

(x+1, x+3)

(x+2, x+3)

Interpretation of incidence list

(x, x+1) represents inside the if condition

(x, x+2) represents inside the else condition

(x+1, x+3) represents the end of the if/else with the if condition satisfied

(x+2, x+3) represents the end of the if/else with the else condition satisfied

Loop detection

Loops primarily create three graphs based on three types of loops: the normal loop, continue loop, and break loop. Normal loops consist of top-to-down direction graphs, but the edge from the last node leads to the start node. The start node also has an edge leading to finish node based upon the condition. This case is similar in all type of loops.

Continue loops have an edge going from the middle nodes to the start node, while break loops have an edge going from the middle nodes to the outside of the loop nodes. Figure 12 depicts a for loop with an if/else statement that contains the switch and break cases. This helps us to determine the difference in detecting these loops.

Factors like conditions and loop counters have already been handled by the function handlers in the previous step.

Dependency graph

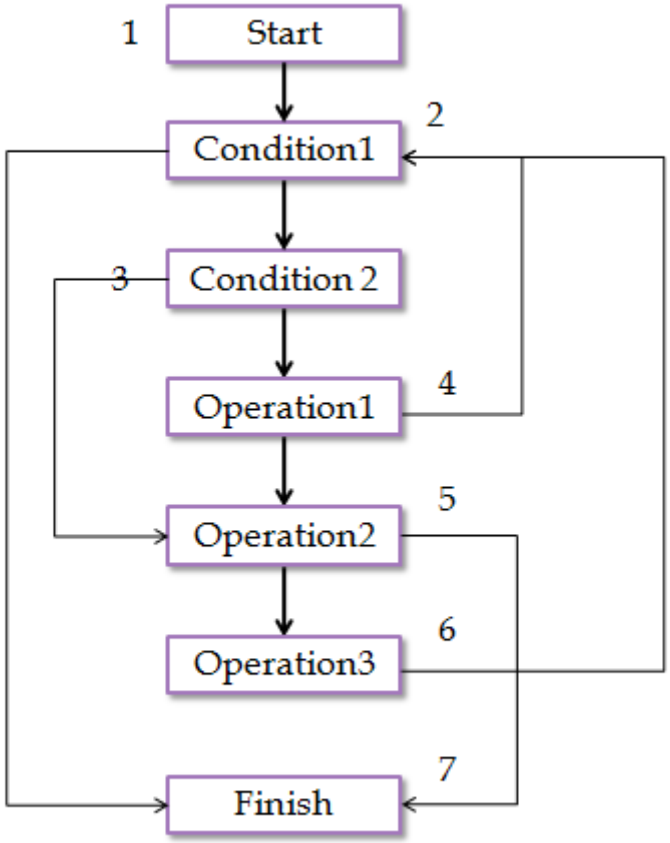

Figure 12: Dependency graph for loop

Incidence list

(1, 2)
(2, 3), (2, 7)
(3, 4), (3, 5)
(4, 5), (4, 2)
(5, 6), (5, 7)
(6, 2)

Interpretation of the incidence list

(2, 3), (2, 7) represents the for loop condition
(3, 4), (3, 5) represents the if/else condition
(4, 5), (4, 2) represents continue
(5, 6), (5, 7) represents break
(6, 2) represents one loop iteration

Switch detection

Switch case statements are similar to if/then statements. However, if the code consists of multiple ifs accessing the same variable, it is very difficult to determine the difference between them as they will produce the same dependency graph. The switch is detected if the graph consists of a vertex with many outgoing edges to different nodes, which then have outgoing edges to a finish node. The default case can be detected, as there will be an edge with no condition. Figure 13 on the next page depicts the dependency graph.

Dependency graph

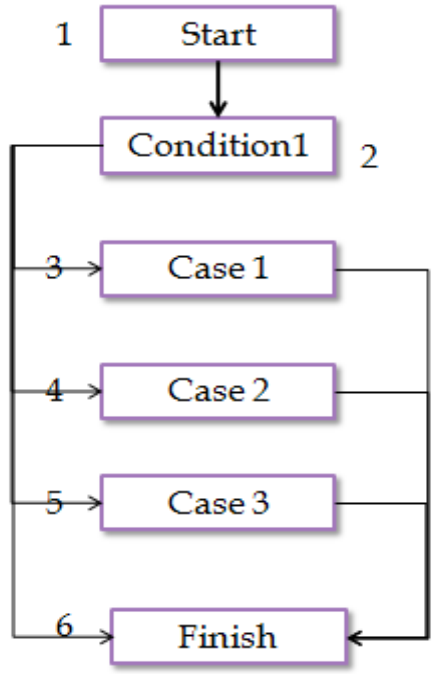

Figure 13: Dependency graph for switch case

Incidence list

(1, 2)

(2, 3), (2, 4), (2, 5), (2, 6)

(3, 6)

(4, 6)

(5, 6)

Interpretation of the incidence list

(1, 2) represents the switch condition

(2, 3), (2, 4), (2, 5), (2, 6) represents different cases

(3, 6) represents the end of the switch case with case 1 satisfied

(4, 6) represents the end of the switch case with case 1 satisfied

(5, 6) represents the end of the switch case with case 1 satisfied

5.3.4 Output generation

This step produces the final output of the algorithm: the pseudo C code. The major functions of this step include variable naming, syntax structuring, and filling the information gaps left over from the previous steps. This step does not involve much complicated logic, as much of the information necessary to complete this step is available from the previous steps.

Variable naming

The register-analyzing and stack-analyzing steps help us to determine the number of parameters passed to this function or the number of local variables created. Retrieving the original variable names is not possible in this process, so we assign new variable names to our newly-found variables. The naming convention names them according to "ParamXX," where XX stands for increasing order – 00, 01, 02.

Function definition

We obtained the information about the function calling convention and parameters from the previous steps. Determining the function return type is currently not within the scope of this project. This step creates the function prototype based on the information we have acquired.

Syntax structuring

The graph generation phase has already provided the high-level programming logic of the reversed assembly code. Now, this step handles the parenthesis "{" and "}" around this code, relying on regular expressions and flags from the previous steps.

Gap filling

Some assembly codes that refer to a different memory location outside of input through the use of CALL functions are not possible to decompile with this algorithm. Library or system function references are examples of this – they are represented in the output by their same assembly instruction.

5.3.5 Output

Below is the final output created by the algorithm. This example consists of three parameter inputs, for loop, switch case, and if-then-else. The output has the look and feel of a C code, and is more understandable than related assembly code. Printf statements are represented by call instructions to the related address in data section.

```
Recognized view >>

int __stdcall Function ( int Param0, int Param1, int Param2 )
{
    i = 0;
    goto Label0;
    do
    {
        i += 1;
Label0:
        if ( i >= Param2 )
            break;
        if ( i != Param0 )
            goto Label1;
        goto Label2;
Label1:
        call 0x12D8248;
    } while ( true );
Label2:
    LocalVar30 = Param0;
    switch ( Param0 )
    {
        case 1:
            call 0x12D8248;
        break;

        case 2:
            call 0x12D8248;
        break;

    }
    call 0x12D8248;
    if ( Param0 > Param1 )
    {
        call 0x12D8248;
    } else
    {
        call 0x12D8248;
    }
}

>> End of recognized view
```

Figure 14: Recognized view output

6. Test cases and Results

In this section we discuss a complete test case along with its results. More test cases with different original code syntaxes and structures are provided in Appendix A. This particular test case consists of for loop, switch case, and if/else in the original code. The compiler used to compile test cases is Microsoft Visual C++, and the assembler is Microsoft x86 Assembler. Optimization has been disabled for generating the test cases. The original C code, generated assembly code, and decompiler-generated output is provided below:

Original Code

```
void __fastcall Test14b ( int a, int b, int c )
{
    for ( int i = 0; i < c; i++ )
    {
        if ( i == a )
            break;
        printf ( "loop" );
    }

    switch ( a )
    {
        case 1:
            printf ( "a = 1\n" );
        break;

        case 2:
            printf ( "a = 2\n" );
        break;
    }

    printf ( "in the middle\n" );

    if ( a > b )
        printf ( "a > b\n" );
    else
        printf ( "a <= b\n" );
}
```

Code 11: Test case C code

Assembly Code

```
012D2320  push        ebp
012D2321  mov         ebp,esp
012D2323  sub         esp,50h
012D2326  push        ebx
012D2327  push        esi
012D2328  push        edi
012D2329  mov         dword ptr [ebp-8],edx
012D232C  mov         dword ptr [ebp-4],ecx
012D232F  mov         dword ptr [ebp-0Ch],0
012D2336  jmp         012D2341
012D2338  mov         eax,dword ptr [ebp-0Ch]
012D233B  add         eax,1
012D233E  mov         dword ptr [ebp-0Ch],eax
012D2341  mov         eax,dword ptr [ebp-0Ch]
012D2344  cmp         eax,dword ptr [ebp+8]
012D2347  jge         012D2363
012D2349  mov         eax,dword ptr [ebp-0Ch]
012D234C  cmp         eax,dword ptr [ebp-4]
012D234F  jne         012D2353
012D2351  jmp         012D2363
012D2353  push        12D5870h
012D2358  call        dword ptr ds:[12D8248h]
012D235E  add         esp,4
012D2361  jmp         012D2338
012D2363  mov         eax,dword ptr [ebp-4]
012D2366  mov         dword ptr [ebp-50h],eax
012D2369  cmp         dword ptr [ebp-50h],1
012D236D  je          012D2377
012D236F  cmp         dword ptr [ebp-50h],2
012D2373  je          012D2387
012D2375  jmp         012D2395
012D2377  push        12D5854h
012D237C  call        dword ptr ds:[12D8248h]
012D2382  add         esp,4
012D2385  jmp         012D2395
012D2387  push        12D5840h
012D238C  call        dword ptr ds:[12D8248h]
012D2392  add         esp,4
012D2395  push        12D5880h
012D239A  call        dword ptr ds:[12D8248h]
012D23A0  add         esp,4
012D23A3  mov         eax,dword ptr [ebp-4]
012D23A6  cmp         eax,dword ptr [ebp-8]
012D23A9  jle         012D23BB
012D23AB  push        12D5734h
012D23B0  call        dword ptr ds:[12D8248h]
012D23B6  add         esp,4
012D23B9  jmp         012D23C9
012D23BB  push        12D5784h
012D23C0  call        dword ptr ds:[12D8248h]
012D23C6  add         esp,4
012D23C9  pop         edi
012D23CA  pop         esi
012D23CB  pop         ebx
012D23CC  mov         esp,ebp
012D23CE  pop         ebp
012D23CF  ret         4
```

Assembly code 7: Test case assembly code

Decompiler-Generated Output

```
Recognized view >>

int __fastcall Function ( int Param0, int Param1, int Param2 )
{
    LocalVar14 = Param1;
    LocalVar13 = Param0;
    i = 0;
    goto Label0;
    do
    {
        i += 1;
Label0:
        if ( i >= Param2 )
            break;
        if ( i != Param0 )
            goto Label1;
        goto Label2;
Label1:
        call 0x12D8248;
    } while ( true );
Label2:
    LocalVar32 = Param0;
    switch ( Param0 )
    {
        case 1:
            call 0x12D8248;
        break;

        case 2:
            call 0x12D8248;
        break;

    }
    call 0x12D8248;
    if ( Param0 > Param1 )
    {
        call 0x12D8248;
    } else
    {
        call 0x12D8248;
    }
}

>> End of recognized view
```

Figure 15: Decompiler-generated output

6.1 Comparison with manual decompilation

This test case involves manually decompiling assembly code and comparing it with the algorithm-generated output. The assembly code was provided to a user with some assembly language knowledge, who was then asked to generate a C code. The test case chosen was quite simple, containing only an if/else. The original C code, assembly code, manually-generated code, and decompiler-generated output are provided below:

Original Code

```
void __cdecl Test2a ( int a, int b )
{
    if ( a < b )
        printf ( "a < b\n" );
    else
        printf ( "a >= b\n" );
}
```

Code 12: if/else original C code

Assembly Code

```
01141250  push        ebp
01141251  mov         ebp,esp
01141253  sub         esp,40h
01141256  push        ebx
01141257  push        esi
01141258  push        edi
01141259  mov         eax,dword ptr [ebp+8]
0114125C  cmp         eax,dword ptr [ebp+0Ch]
0114125F  jge         01141271
01141261  push        1145720h
01141266  call        dword ptr ds:[1148248h]
0114126C  add         esp,4
0114126F  jmp         0114127F
01141271  push        1145728h
01141276  call        dword ptr ds:[1148248h]
0114127C  add         esp,4
0114127F  pop         edi
01141280  pop         esi
01141281  pop         ebx
01141282  mov         esp,ebp
01141284  pop         ebp
01141285  ret
```

Assembly code 8: Assembly code if/else

Manually-Generated C Code

```
void test ( )
{
    int i, j;
    if ( i < j )
        do something;
    if ( i > j )
        do something;
}
```

Code 13: Manually-generated output

Decompiler-Generated C Code

```
int __cdecl Function ( int Param0, int Param1 )
{
    if ( Param0 < Param1 )
    {
        call 0x1148248;
    } else
    {
        call 0x1148248;
    }
}
```

Figure 16: Decompiler-generated output

Analysis

As we can see, the user was unable to determine the calling convention used for the function call. As a result, the user was unable to find the number of parameters passed to the algorithm, and this leads to the assumption of two local variables i and j. Also, the original syntax of if/else was not replaced by two simple ifs, and the user was unable to determine the details inside the if statements.

8. Future Work

From this research, we can conclude that decompilation is a very complicated process, and is constrained by a number of limitations. The proposed algorithm tries to implement some of the concepts in the above-mentioned process in a very effective way. However, many improvements could still be added to this algorithm for a more successful reversing process and to cover more assembly instructions.

More complicated assembly instructions

If other assembly instructions that are more complicated and not covered in this paper could be added to this algorithm, it could improve the reversing of highly-complicated code. The algorithm is adaptable to the addition of other instructions by adding them to the function mapping and implementing the corresponding functionality of that instruction in its relative function. If the assembly instruction to be added is more dependent on execution flow of the code, then it would require a considerable amount of testing with the assembly to determine the changes in dependency graphs created by these instructions [7].

Instructions that are standalone or that do not affect the execution flow can easily be implemented with the above approach. Before adding the implementation of the assembly instructions, the instruction's impact on the output code needs to be studied deeply. Some assembly instructions are created specifically for hardware operations that do not have corresponding high-level language implementations. Decompilation algorithms are heavily based on assumptions [1] [3], but we would like to keep the assumption factor of the algorithm as low as possible. One possible way to achieve this is by not adding extra support for instructions that do not play a major role in the related output.

Handling the data section with the code section

This algorithm is currently limited to handling only the .code section of the assembly language. Future work could include modifying the algorithm to handle both the .data section and the .code section [12]. This could help to achieve the constants and values used in high-level language.

This feature can retrieve the strings and other data that gets separated from the code section during the compilation process [15].

Inbuilt disassembler

The current scenario takes the .dis file as an input and generates a text C file. If a further step to disassemble – that is, reversing the machine code to the assembly code from an executable file – is added to the algorithm, we could avoid the manual file creation of the .dis file. Also, the algorithm would have more information, along with all the sections that it currently lacks.

Object oriented code and user interface

These two topics have been the least touched on in this process, as reversing them is extremely complicated and mostly unreliable in terms of the output generated. The assembly code removes the concept of the object oriented code when it is compiled [7], and the UI code is handled by the system calls. With different compiler settings and a controlled environment, we could still attempt to overcome these barriers.

Appendix A – Test cases and results

If /else Statements

Original Code

```
void __cdecl Test2a ( int a, int b )
{
        if    ( a < b )
                printf ( "a < b\n" );
        else
                printf ( "a >= b\n" );
}
```

Assembly Code

```
01141250  push        ebp
01141251  mov         ebp,esp
01141253  sub         esp,40h
01141256  push        ebx
01141257  push        esi
01141258  push        edi
01141259  mov         eax,dword ptr [ebp+8]
0114125C  cmp         eax,dword ptr [ebp+0Ch]
0114125F  jge         01141271
01141261  push        1145720h
01141266  call        dword ptr ds:[1148248h]
0114126C  add         esp,4
0114126F  jmp         0114127F
01141271  push        1145728h
01141276  call        dword ptr ds:[1148248h]
0114127C  add         esp,4
0114127F  pop         edi
01141280  pop         esi
01141281  pop         ebx
01141282  mov         esp,ebp
01141284  pop         ebp
01141285  ret
```

Decompiled Output

```
Recognized view >>

int __cdecl Function ( int Param0, int Param1 )
{
    if ( Param0 < Param1 )
    {
        call 0x1148248;
    } else
    {
        call 0x1148248;
    }
}

>> End of recognized view
```

Nested if /else statements

Original Code

```
void __cdecl Test3a ( int a, int b )
{
    if ( a < b )
        printf ( "a < b\n" );
    else
        if ( a == b )
            printf ( "a = b\n" );
        else
            printf ( "a > b\n" );
}
```

Assembly Code

```
01141340  push        ebp
01141341  mov         ebp,esp
01141343  sub         esp,40h
01141346  push        ebx
01141347  push        esi
01141348  push        edi
01141349  mov         eax,dword ptr [ebp+8]
0114134C  cmp         eax,dword ptr [ebp+0Ch]
0114134F  jge         01141361
01141351  push        1145720h
01141356  call        dword ptr ds:[1148248h]
0114135C  add         esp,4
0114135F  jmp         01141387
01141361  mov         eax,dword ptr [ebp+8]
01141364  cmp         eax,dword ptr [ebp+0Ch]
01141367  jne         01141379
01141369  push        114573Ch
0114136E  call        dword ptr ds:[1148248h]
01141374  add         esp,4
01141377  jmp         01141387
01141379  push        1145734h
0114137E  call        dword ptr ds:[1148248h]
01141384  add         esp,4
01141387  pop         edi
01141388  pop         esi
01141389  pop         ebx
0114138A  mov         esp,ebp
0114138C  pop         ebp
0114138D  ret
```

Decompiled Output

```
Recognized view >>
int __cdecl Function < int Param0, int Param1 >
{
    if < Param0 < Param1 >
    {
        call 0x1148248;
    } else
    {
        if < Param0 == Param1 >
        {
            call 0x1148248;
        } else
        {
            call 0x1148248;
        }
    }
}
>> End of recognized view
```

Complex if /else statements

Original Code

```
void __fastcall Test4b ( int a, int b, int c )
{
    if ( a == b && b == c )
        printf ( "a = b = c\n" );
}
```

Assembly Code

```
011414D0  push        ebp
011414D1  mov         ebp,esp
011414D3  sub         esp,48h
011414D6  push        ebx
011414D7  push        esi
011414D8  push        edi
011414D9  mov         dword ptr [ebp-8],edx
011414DC  mov         dword ptr [ebp-4],ecx
011414DF  mov         eax,dword ptr [ebp-4]
011414E2  cmp         eax,dword ptr [ebp-8]
011414E5  jne         011414FD
011414E7  mov         eax,dword ptr [ebp-8]
011414EA  cmp         eax,dword ptr [ebp+8]
011414ED  jne         011414FD
011414EF  push        1145744h
011414F4  call        dword ptr ds:[1148248h]
011414FA  add         esp,4
011414FD  pop         edi
011414FE  pop         esi
011414FF  pop         ebx
01141500  mov         esp,ebp
01141502  pop         ebp
01141503  ret         4
```

Decompiled Output

```
Recognized view >>

int __fastcall Function ( int Param0, int Param1, int Param2 )
{
    if ( Param0 == Param1 &&
         Param1 == Param2 )
    {
        call 0x1148248;
    }
}

>> End of recognized view
```

Complex if /else statements

Original Code

```
void __stdcall Test6c ( int a, int b, int c )
{
    if ( a == b && b != c && a > c )
        printf ( "a = b and b != c and a > c\n" );
}
```

Assembly Code

```
013C1720  push        ebp
013C1721  mov         ebp,esp
013C1723  sub         esp,40h
013C1726  push        ebx
013C1727  push        esi
013C1728  push        edi
013C1729  mov         eax,dword ptr [ebp+8]
013C172C  cmp         eax,dword ptr [ebp+0Ch]
013C172F  jne         013C174F
013C1731  mov         eax,dword ptr [ebp+0Ch]
013C1734  cmp         eax,dword ptr [ebp+10h]
013C1737  je          013C174F
013C1739  mov         eax,dword ptr [ebp+8]
013C173C  cmp         eax,dword ptr [ebp+10h]
013C173F  jle         013C174F
013C1741  push        13C5768h
013C1746  call        dword ptr ds:[13C8248h]
013C174C  add         esp,4
013C174F  pop         edi
013C1750  pop         esi
013C1751  pop         ebx
013C1752  mov         esp,ebp
013C1754  pop         ebp
013C1755  ret         0Ch
```

Decompiled Output

```
Recognized view >>

int __stdcall Function ( int Param0, int Param1, int Param2 )
{
    if ( Param0 == Param1 &&
         Param1 != Param2 &&
         Param0 > Param2 )
    {
        call 0x13C8248;
    }
}

>> End of recognized view
```

Complex nested if/else ladder

Original Code

```
void __cdecl Test7a ( int a, int b, int c )
{
    if ( a < b )
    {
        if ( b < c )
            printf ( "a < b and b < c\n" );
        else if ( b == c )
            printf ( "a < b and b = c\n" );
        else
            printf ( "a < b and b > c\n" );
    } else
        if ( a == b )
        {
            if ( b < c )
                printf ( "a = b and b < c\n" );
            else if ( b == c )
                printf ( "a = b and b = c\n" );
            else
                printf ( "a = b and b > c\n" );
        } else
        {
            if ( b < c )
                printf ( "a > b and b < c\n" );
            else if ( b == c )
                printf ( "a > b and b = c\n" );
            else
                printf ( "a > b and b > c\n" );
        }
}
```

Assembly Code

```
01141720  push        ebp
01141721  mov         ebp,esp
01141723  sub         esp,40h
01141726  push        ebx
01141727  push        esi
01141728  push        edi
01141729  mov         eax,dword ptr [ebp+8]
0114172C  cmp         eax,dword ptr [ebp+0Ch]
0114172F  jge         01141774
01141731  mov         eax,dword ptr [ebp+0Ch]
01141734  cmp         eax,dword ptr [ebp+10h]
01141737  jge         01141749
0114173E  call        dword ptr ds:[1148248h]
01141744  add         esp,4
01141747  jmp         0114176F
01141749  mov         eax,dword ptr [ebp+0Ch]
0114174C  cmp         eax,dword ptr [ebp+10h]
0114174F  jne         01141761
01141751  push        1145818h
01141756  call        dword ptr ds:[1148248h]
0114175C  add         esp,4
0114175F  jmp         0114176F
01141761  push        1145804h
01141766  call        dword ptr ds:[1148248h]
0114176C  add         esp,4
01141774  mov         eax,dword ptr [ebp+8]
01141777  cmp         eax,dword ptr [ebp+0Ch]
0114177A  jne         011417BC
0114177C  mov         eax,dword ptr [ebp+0Ch]
0114177F  cmp         eax,dword ptr [ebp+10h]
01141782  jge         01141794
01141784  push        11457F0h
01141789  call        dword ptr ds:[1148248h]
0114178F  add         esp,4
01141792  jmp         011417BA
01141794  mov         eax,dword ptr [ebp+0Ch]
01141797  cmp         eax,dword ptr [ebp+10h]
0114179A  jne         011417AC
0114179C  push        11457DCh
011417A1  call        dword ptr ds:[1148248h]
011417A7  add         esp,4
011417AA  jmp         011417BA
011417AC  push        11457C8h
011417B7  add         esp,4
011417BA  jmp         011417FA
011417BC  mov         eax,dword ptr [ebp+0Ch]
011417BF  cmp         eax,dword ptr [ebp+10h]
011417C2  jge         011417D4
011417C4  push        11457B4h
011417CF  add         esp,4
011417D2  jmp         011417FA
011417D4  mov         eax,dword ptr [ebp+0Ch]
011417D7  cmp         eax,dword ptr [ebp+10h]
011417DA  jne         011417EC
011417DC  push        11457A0h
011417E1  call        dword ptr ds:[1148248h]
011417E7  add         esp,4
011417EA  jmp         011417FA
011417EC  push        114578Ch
011417F1  call        dword ptr ds:[1148248h]
011417F7  add         esp,4
011417FA  pop         edi
011417FB  pop         esi
011417FC  pop         ebx
011417FD  mov         esp,ebp
011417FF  pop         ebp
01141800  ret
```

Decompiled Output

```
int __cdecl Function ( int Param0, int Param1, int Param2 )
{
    if ( Param0 < Param1 )
    {
        if ( Param1 < Param2 )
        {
            call 0x1148248;
        } else
        {
            if ( Param1 == Param2 )
            {
                call 0x1148248;
            } else
            {
                call 0x1148248;
            }
        }
    } else
    {
        if ( Param0 == Param1 )
        {
            if ( Param1 < Param2 )
            {
                call 0x1148248;
            } else
            {
                if ( Param1 == Param2 )
                {
                    call 0x1148248;
                } else
                {
                    call 0x1148248;
                }
            }
        } else
        {
            if ( Param1 < Param2 )
            {
                call 0x1148248;
            } else
            {
                if ( Param1 == Param2 )
                {
                    call 0x1148248;
                } else
                {
                    call 0x1148248;
                }
            }
        }
    }
}
```

Switch case

Original Code

```
void __stdcall Test9c ( int a )
{
    switch ( a )
    {
        case 0:
            printf ( "a = 0\n" );
        break;

        case 1:
            printf ( "a = 1\n" );
        break;

        case 2:
            printf ( "a = 2\n" );
        break;

        default:
            printf ( "a out of range\n" );
        break;
    }
}
```

Assembly Code

```
00BF1E50  push        ebp
00BF1E51  mov         ebp,esp
00BF1E53  sub         esp,44h
00BF1E56  push        ebx
00BF1E57  push        esi
00BF1E58  push        edi
00BF1E59  mov         eax,dword ptr [ebp+8]
00BF1E5C  mov         dword ptr [ebp-44h],eax
00BF1E5F  cmp         dword ptr [ebp-44h],0
00BF1E63  je          00BF1E73
00BF1E65  cmp         dword ptr [ebp-44h],1
00BF1E69  je          00BF1E83
00BF1E6B  cmp         dword ptr [ebp-44h],2
00BF1E6F  je          00BF1E93
00BF1E71  jmp         00BF1EA3
00BF1E73  push        0BF585Ch
00BF1E78  call        dword ptr ds:[0BF8248h]
00BF1E7E  add         esp,4
00BF1E81  jmp         00BF1EB1
00BF1E83  push        0BF5854h
00BF1E88  call        dword ptr ds:[0BF8248h]
00BF1E8E  add         esp,4
00BF1E91  jmp         00BF1EB1
00BF1E93  push        0BF5840h
00BF1E98  call        dword ptr ds:[0BF8248h]
00BF1E9E  add         esp,4
00BF1EA1  jmp         00BF1EB1
```

```
00BF1EA3  push        0BF5BA8h
00BF1EA8  call        dword ptr ds:[0BF8248h]
00BF1EAE  add         esp,4
00BF1EB1  pop         edi
00BF1EB2  pop         esi
00BF1EB3  pop         ebx
00BF1EB4  mov         esp,ebp
00BF1EB6  pop         ebp
00BF1EB7  ret         4
```

Decompiled Output

```
Recognized view >>

int __stdcall Function ( int Param0 )
{
    switch ( Param0 )
    {
        case 0:
            call 0x2C8248;
        break;

        case 1:
            call 0x2C8248;
        break;

        case 2:
            call 0x2C8248;
        break;

        default:
            call 0x2C8248;
        break;

    }
}

>> End of recognized view
```

For loop with break and continue

Original Code

```
void __stdcall Test13c ( int a, int b, int c )
{
    for ( int i = 0; i < c; i += 3 )
    {
        if ( i == b )
            break;

        if ( i == a )
            continue;

        printf ( "%d\n", i );
    }
}
```

Assembly Code

```
012D1EC0  push        ebp
012D1EC1  mov         ebp,esp
012D1EC3  sub         esp,44h
012D1EC6  push        ebx
012D1EC7  push        esi
012D1EC8  push        edi
012D1EC9  mov         dword ptr [ebp-4],0
012D1ED0  jmp         012D1EDB
012D1ED2  mov         eax,dword ptr [ebp-4]
012D1ED5  add         eax,3
012D1ED8  mov         dword ptr [ebp-4],eax
012D1EDB  mov         eax,dword ptr [ebp-4]
012D1EDE  cmp         eax,dword ptr [ebp+10h]
012D1EE1  jge         012D1F0B
012D1EE3  mov         eax,dword ptr [ebp-4]
012D1EE6  cmp         eax,dword ptr [ebp+0Ch]
012D1EE9  jne         012D1EED
012D1EEB  jmp         012D1F0B
012D1EED  mov         eax,dword ptr [ebp-4]
012D1EF0  cmp         eax,dword ptr [ebp+8]
012D1EF3  jne         012D1EF7
012D1EF5  jmp         012D1ED2
012D1EF7  mov         eax,dword ptr [ebp-4]
012D1EFA  push        eax
012D1EFB  push        12D586Ch
012D1F00  call        dword ptr ds:[12D8248h]
012D1F06  add         esp,8
012D1F09  jmp         012D1ED2
012D1F0B  pop         edi
012D1F0C  pop         esi
012D1F0D  pop         ebx
012D1F0E  mov         esp,ebp
012D1F10  pop         ebp
012D1F11  ret         0Ch
```

Decompiled Output

```
Recognized view >>

int __stdcall Function ( int Param0, int Param1, int Param2 )
{
    i = 0;
    goto Label0;
    do
    {
        i += 3;
Label0:
        if ( i >= Param2 )
            break;
        if ( i != Param1 )
            goto Label1;
        goto Label2;
Label1:
        if ( i == Param0 )
            continue;
        call 0x12D8248;
    } while ( true );
Label2:
}

>> End of recognized view
```

Floating point math operations

Original Code

```
void Test15 ( float a, float b )
{
    float c;

    c = a + b;
    printf ( "%f\n", c );
    c = a - b;
    printf ( "%f\n", c );
    c = a * b;
    printf ( "%f\n", c );
    c = a / b;
    printf ( "%f\n", c );
}
```

Assembly Code

```
012D2490  push        ebp
012D2491  mov         ebp,esp
012D2493  sub         esp,44h
012D2496  push        ebx
012D2497  push        esi
012D2498  push        edi
012D2499  fld         dword ptr [ebp+8]
012D249C  fadd        dword ptr [ebp+0Ch]
012D249F  fstp        dword ptr [ebp-4]
012D24A2  fld         dword ptr [ebp-4]
012D24A5  sub         esp,8
012D24A8  fstp        qword ptr [esp]
012D24AB  push        12D5730h
012D24B0  call        dword ptr ds:[12D8248h]
012D24B6  add         esp,0Ch
012D24B9  fld         dword ptr [ebp+8]
012D24BC  fsub        dword ptr [ebp+0Ch]
012D24BF  fstp        dword ptr [ebp-4]
012D24C2  fld         dword ptr [ebp-4]
012D24C5  sub         esp,8
012D24C8  fstp        qword ptr [esp]
012D24CB  push        12D5730h
012D24D0  call        dword ptr ds:[12D8248h]
012D24D6  add         esp,0Ch
012D24D9  fld         dword ptr [ebp+8]
012D24DC  fmul        dword ptr [ebp+0Ch]
012D24DF  fstp        dword ptr [ebp-4]
012D24E2  fld         dword ptr [ebp-4]
012D24E5  sub         esp,8
012D24E8  fstp        qword ptr [esp]
012D24EB  push        12D5730h
012D24F0  call        dword ptr ds:[12D8248h]
012D24F6  add         esp,0Ch
012D24F9  fld         dword ptr [ebp+8]
012D24FC  fdiv        dword ptr [ebp+0Ch]
012D24FF  fstp        dword ptr [ebp-4]
012D2502  fld         dword ptr [ebp-4]
012D2505  sub         esp,8
012D2508  fstp        qword ptr [esp]
```

```
012D250B  push        12D5730h
012D2510  call        dword ptr ds:[12D8248h]
012D2516  add         esp,0Ch
012D2519  pop         edi
012D251A  pop         esi
012D251B  pop         ebx
012D251C  mov         esp,ebp
012D251E  pop         ebp
012D251F  ret
```

Decompiled Output

```
Recognized view >>

void Function (  )
{
    ST(0) = Param0;
    ST(0) = ST(0) + Param1;
    Param0 = ST(0);
    ST(0) = Param0;
    call 0x1068248;
    ST(0) = Param0;
    ST(0) = ST(0) - Param1;
    Param0 = ST(0);
    ST(0) = Param0;
    call 0x1068248;
    ST(0) = Param0;
    ST(0) = ST(0) * Param1;
    Param0 = ST(0);
    ST(0) = Param0;
    call 0x1068248;
    ST(0) = Param0;
    ST(0) = ST(0) / Param1;
    Param0 = ST(0);
    ST(0) = Param0;
    call 0x1068248;
}

>> End of recognized view
```

References

1. M. Emmerich (2007). *Static Single Assignment for Decompilation.*
2. P. Enzo (2009). *ASM to C Translation table.*
3. *Decompiler topics* (2011) retrieved from: http://www.compwisdom.com/topics/Decompiler
4. *Decompilation Wiki* (2011) retrieved from: http://program-transformation.org/Transform/DeCompilation
5. *The dcc compiler* (2011) retrieved from: http://www.itee.uq.edu.au/~cristina/dcc.html
6. *REC compiler* (2011) retrieved from: http://www.backerstreet.com/rec/rec.htm
7. Paul Carter (2004). *PC assembly language*.
8. Intel assets (2011). *Intel 64 and IA32 architecture. Volume 2 (2A & 2B): Instruction Set Reference, A-Z.*
9. E. Chikofsky and J. Cross (1990). *Reverse engineering and design recovery.*
10. C. Mills, S. Ahalt, and J. Fowler (1991). *Compiled instruction set simulation. Software _ Practice and Experience.*
11. G. Morrisett, D. Walker, K. Crary, and N. Glew (1998). *From System F to typed assembly language.*
12. Matt Pietrek (2002). *An In-Depth Look into the Win32 Portable Executable File Format.* February 2002 issue of MSDN Magazine.
13. C. Cifuentes. (1994). *Reverse Compilation Techniques.*
14. G. Balakrishnan, T. Reps, D. Melski, and T. Teitelbaum (2005). *WYSINWYX:What You See Is Not What You eXecute.*
15. R. Horspool and N. Marovac (1979). *An approach to the problem of detranslation of computer programs*.
16. D. Eriksson (2002). *Desquirr web page*.
17. A. Mycroft (1999). *Type-based decompilation*.
18. Andromeda decompiler (2004). *Andromeda decompiler web page*.
19. I. Guilfanov (2007). *Decompilation gets real*.

20. Austin Code Works (1990), *Exec-2 Decompiler*

21. Balmas, Francoise (2001). *Displaying dependence graphs: a hierarchical approach.*

22. M. T. Goodrich and R. Tamassia (1998). *Data Structures and Algorithms.*

23. Scott, M. Lee (2005). *Programming Language Pragmatics*.

24. G. Caprino (2003). *REC - Reverse Engineering Compiler*.

25. S. Kumar (2001). *Disc.*

26. J. Miecznikowski and L. Hendren (2002). *Decompiling Java bytecode: Problems, traps and pitfalls.*

27. J. Hoenicke (2000). *Java Optimize and Decompile Environment.*

28. P. Kouznetsov (1999). *JAD - the fast JAva Decompiler.*

29. K. Kumar (2001). *JReversePro - Java decompiler.*

30. V. Schneider and G. Winiger (1974). *Translation grammars for compilation and Decompilation.*

31. J. Reuter (1988). *Public domain software*.

32. Muchnick, Steven (1997). *Advanced Compiler Design and Implementation*.