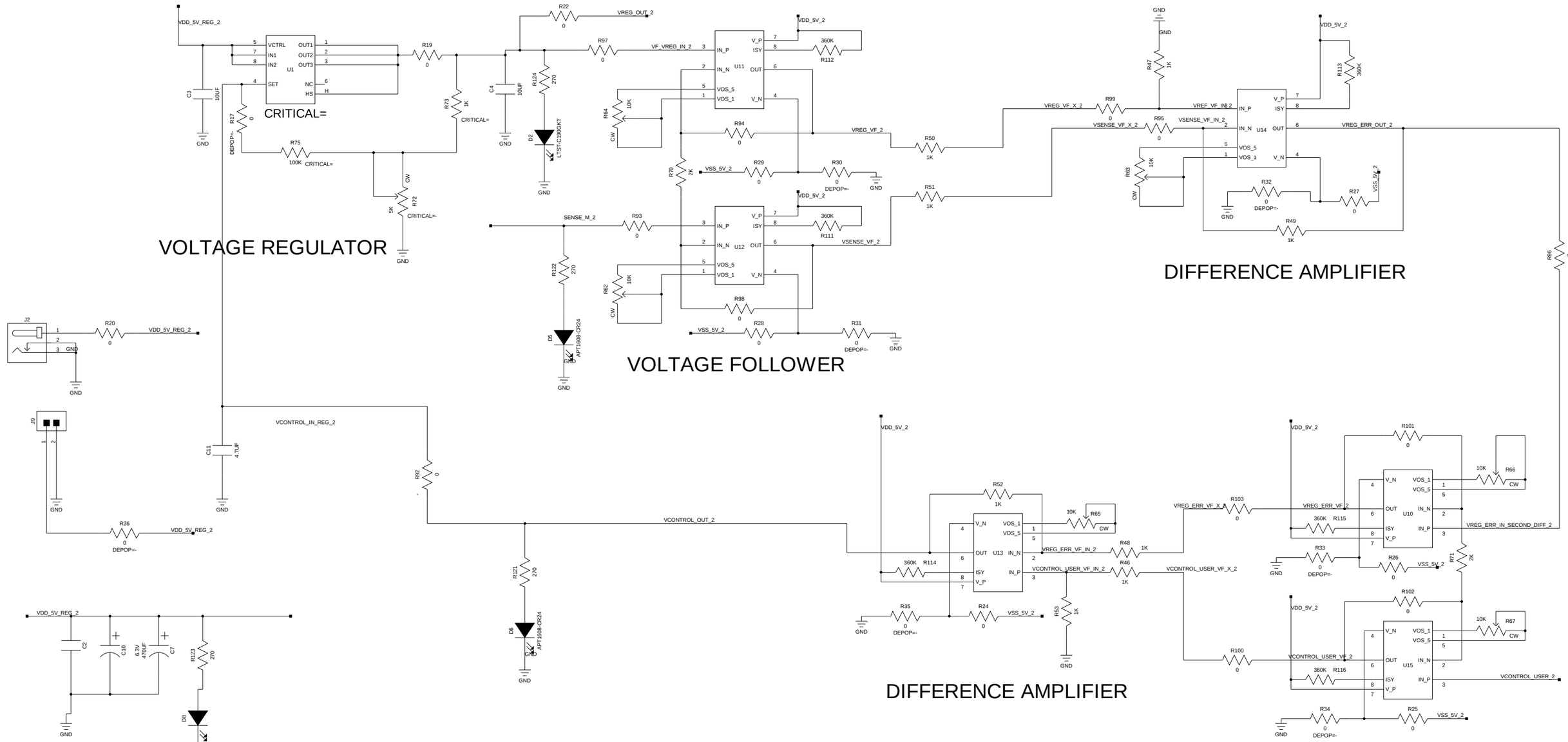

Approvals		Broadcom Company Confidential		
Designer	Date	SIZE B	TITLE BCM9POWERAD	
Reviewer	Date			
Reviewer	Date	Designer SANJEEVV	Drawing Number 824-122963-0000	Version X100
Reviewer	Date	DATE 01-07-2012_20:06	SHEET 1 OF 1	